Input–output robustness in simple bacterial signaling systems

Guy Shinar*, Ron Milo*†, María Rodríguez Martínez*, and Uri Alon*‡

*Departments of Molecular Cell Biology and Physics of Complex Systems, Weizmann Institute of Science, Rehovot 76100, Israel

Edited by John J. Tyson, Virginia Polytechnic Institute and State University, Blacksburg, VA, and accepted by the Editorial Board October 31, 2007 (received for review July 20, 2007)

Biological signaling systems produce an output, such as the level of a phosphorylated protein, in response to defined input signals. The output level as a function of the input level is called the system's input–output relation. One may ask whether this input–output relation is sensitive to changes in the concentrations of the system's components, such as proteins and ATP. Because component concentrations often vary from cell to cell, it might be expected that the input–output relation will likewise vary. If this is the case, different cells exposed to the same input signal will display different outputs. Such variability can be deleterious in systems where survival depends on accurate match of output to input. Here we suggest a mechanism that can provide input–output robustness, that is, an input–output relation that does not depend on variations in the concentrations of any of the system's components. The mechanism is based on certain bacterial signaling systems. It explains how specific molecular details can work together to provide robustness. Moreover, it suggests an approach that can help identify a wide family of nonequilibrium mechanisms that potentially have robust input–output relations.

signal transduction | systems biology

Consider a system that produces an output, such as the level of a phosphorylated protein, based on an input signal. The level of output as a function of input signal strength is called the system's input–output relation. One may ask whether this input–output relation is sensitive to variations in the concentrations of the components that make up the system. Because the concentrations of many proteins vary from cell to cell by tens of percents as a result of inherent stochastic processes (1–3), and the concentrations of metabolite components such as ATP may vary by as much as a factor of 10 in different conditions (4), it might be expected that the input–output relation will also vary. If this is the case, different cells exposed to the same input signal will display different outputs. Although such variability may be desirable in some cases, it might be deleterious in systems where survival critically depends on accurate match of output to input.

One may thus ask whether signaling systems can provide an input–output relation independent of the levels of all components in the system, including proteins and ATP. Such a mechanism can be said to have a robust input–output relation. Complete robustness of this type is difficult to achieve; most known models have an output that depends on the level of at least one of the system's components. For example, a model of the bacterial osmotic-stress signaling system EnvZ/OmpR, although robust to variations in the levels of some components, is not robust to ATP levels (5). Known biochemical models of robust adaptation, including the well studied example of bacterial chemotaxis, also do not seem to have this property (6–15). In these models, the output level is sensitive to variations in the protein concentrations (7, 8). Thus, the goal of the present paper is to suggest a way in which signaling systems can provide an input–output relation that is robust to the levels of all of the components of the system[§].

To clarify the notion of input–output robustness, consider a simple counterexample based on allosteric control mechanisms. The system is composed of a protein denoted A (Fig. 1*a*) that undergoes equilibrium transitions between an active state A_1 and an inactive state A_0. The output of the system is the concentration A_1 of the active state.

The partitioning of protein molecules between the A_0 and A_1 forms is governed by the reaction

$$A_0 \underset{k'}{\overset{k(s)}{\rightleftharpoons}} A_1,$$

where s is the input signal (for example, the concentration of an effector molecule), $k(s)$ is the forward rate constant, and k' is the backward rate constant. Thus, by modulating $k(s)$, the input s determines the output A_1.

As in many signaling systems, the transient times for transitions between A_0 and A_1 are much faster than the changes in the input signal. Thus, one can consider the output of the system at steady state, which is determined by the equilibrium condition $k(s)A_0 = k'A_1$, and the conservation equation $A_0 + A_1 = A_T$, where A_T is the total concentration of protein A. Using the former equation in the latter yields the input–output relation of the system, $A_1 = A_T/(1 + k'/k(s))$. This input–output relation is not robust, because the output A_1 depends on the total concentration A_T. Thus, cells with high A_T will show an input–output curve that is different from that of cells with low A_T (Fig. 1*b*).

How can input–output robustness emerge in biochemical signaling systems? Here, we suggest a robust input–output mechanism that is based on properties found in a class of bacterial signaling systems. We also suggest a simple approach for analyzing the robustness properties of more complex circuits. Finally, we discuss experimentally testable predictions that the present mechanism makes.

Results

A Mechanism for Robust Input–Output Relation. A mechanism for a robust input–output relation can be suggested based on biochemical features that are found in a class of bacterial two-component signaling systems. Table 1 lists six such systems, each

GENETICS

Author contributions: G.S. and U.A. designed research; G.S., R.M., M.R.M., and U.A. performed research; and G.S. and U.A. wrote the paper.

The authors declare no conflict of interest.

This article is a PNAS Direct Submission. J.J.T. is a guest editor invited by the Editorial Board.

Freely available online through the PNAS open access option.

†Present address: Department of Systems Biology, Harvard Medical School, 200 Longwood Avenue, Boston, MA 02115.

‡To whom correspondence should be addressed. E-mail: urialon@weizmann.ac.il.

§Here, we use the term ''robustness'' to mean insensitivity to component concentrations (33–35). This is sometimes called ''dynamic robustness.'' In addition, the term robustness is sometimes used to denote insensitivity to mutations or component deletions (36), which are not considered here.

This article contains supporting information online at www.pnas.org/cgi/content/full/0706792104/DC1.

© 2007 by The National Academy of Sciences of the USA

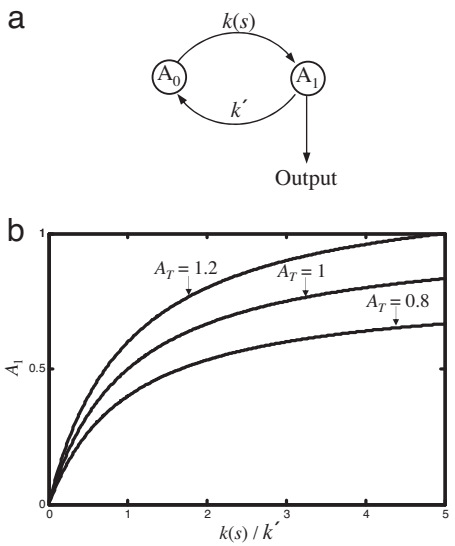

Fig. 1. A signaling scheme that is not robust to variations in protein levels. (*a*) Protein A is found in an inactive state A_0 and an active state A_1, whose concentration is the system's output. The input signal *s* affects one of the rate constants *k*(*s*) (similar conclusions apply if *s* affects the backward rate or both rates). (*b*) Output as a function of the ratio *k*(*s*)/*k*′ depends on the total concentration $A_T = A_0 + A_1$ of protein A. Thus, the input–output relation is not robust.

of which is composed of two proteins, an input-sensitive sensor denoted X and a response regulator denoted Y. The sensor X senses the input signal and acts to phosphorylate the diffusible response-regulator Y. The phosphorylated form of Y, denoted Y_P, activates the expression of relevant genes (16). Thus, the input signals of these systems affect gene expression by setting the output, which is the concentration Y_P.

One well studied example is the EnvZ/OmpR two-component signaling system of *E. coli*. Its primary input is the osmolarity of the medium in which the bacterium grows, and its output is the concentration of phosphorylated response-regulator OmpR, which controls the expression level of genes. In this system, a correlate of the output is the ratio between the transcription levels of two genes controlled by Y_P. This correlate, which is a continuous function of the input signal, has been experimentally shown by Batchelor *et al*. (17) to have a high degree of robustness; at a given input level, the correlate changes by <5% when protein levels are varied by 2-fold and by ≈20% for 10-fold changes (5). This approximate robustness breaks down only at high over- or underexpression of the proteins.

The signaling systems of Table 1 all share certain specific biochemical features (Fig. 2*a*). The first feature concerns the sensor kinase activity. In these systems, the sensor is not a simple kinase that binds Y and ATP to phosphorylate Y. Rather, the sensor works in two steps. First, it phosphorylates itself by binding and hydrolyzing ATP (16). The rate constant of this autophosphorylation, $v_a(s)$, is controlled by the input signal *s*. The phosphorylated sensor, denoted X_P, then performs a phosphotransfer step; it transfers the phosphoryl group to Y, thereby forming Y_P (16).

This two-step process is found in virtually all bacterial two-component systems. The following features, however, appear to be particular only to a class of systems, such as those in Table 1. In these systems, the sensor X is a bifunctional enzyme; it catalyzes not only the phosphorylation of Y but also the dephophosphorylsphorylation of Y_P (16). Finally, ATP, which is used as the phosphoryl donor for the autophosphorylation reaction, is also required as a cofactor for the dephosphorylation

Table 1. Bacterial two-component signaling systems that underlie the present model

System	Organism	Input	Output	Sensor auto-phosphorylation	Phospho-transfer	ATP-dependent response regulator dephosphorylation by the sensor	Phospho-response-regulator half-life, min
EnvZ/OmpR (18–21)	*E. coli*	Osmolarity	Regulation of osmotic response proteins such as outer membrane pores	Yes	Yes	Yes	90
PhoR/PhoB (27)	*E. coli*	Phosphate limitation	Regulation of ≈30 genes, including alkaline-phosphatase	Yes	Yes	Yes*	14
CpxA/CpxR (28, 29)	*E. coli*	Envelope stress	Regulation of genes involved in cell-envelope protein folding and degradation and outer membrane pores	Yes	Yes	Yes	>5 min
PhoQ/PhoP (30)	*E. coli*	Turgor pressure	Regulation of the KdpFABC high-affinity K^+ transport system	Yes	Yes	Yes*	Not reported
ResE/ResD (31)	*B. subtilis*	Oxygen limitation	Regulation of genes needed in anaerobic nitrite respiration, as well as aerobic respiration using cytochrome oxydases	Yes	Yes	Yes*	180
PrrB/PrrA (32)	*R. sphaeroides*	Oxygen limitation	Regulation of photosynthesis genes	Yes	Yes	Yes	330

In the next-to-last column, "Yes" means that ATP is reported to either enable or strongly enhance the dephosphorylation of the response regulator by the sensor; "Yes*" means that ATP was present in the reported dephosphorylation assays, but no comparison to an identical assay without ATP was described.

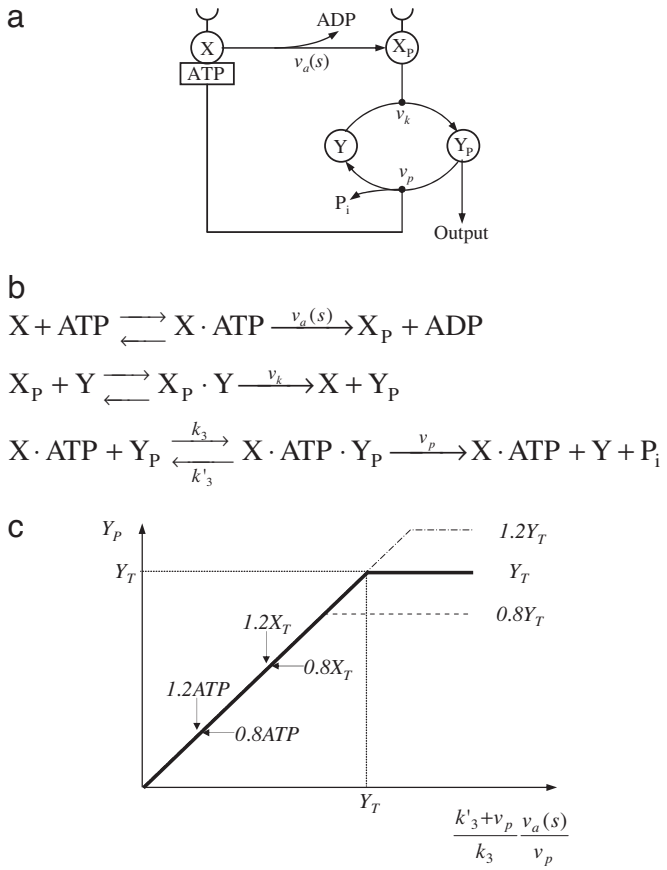

Fig. 2. Mechanism for robust signaling based on a class of bacterial signaling systems. (*a*) Sensor X bound to ATP phosphorylates itself to form X_P. The phosphorylated sensor X_P then transfers the phosphoryl group to the response-regulator Y, thereby forming Y_P, which is the output of the system. The sensor bound to ATP also dephosphorylates Y_P. (*b*) Mechanism reactions and some of their rate constants, where the first reaction is autophosphorylation, the second is phosphotransfer, and the third is dephosphorylation. (*c*) Steady-state level of the output Y_P as a function of the input-signal-modulated function $f(s) = (v_a(s)/v_p)(k'_3 + v_p/k_3$. In the region $f(s) \leq Y_T$, the curve is invariant to changes in the total concentrations X_T and Y_T of the sensor and the response regulator, as well as to changes in the concentration of ATP.

reaction (18–20). This ATP dependence occurs despite the fact that ATP is not used as an energy source in the dephosphorylation step.

The features above were used to construct a signaling mechanism whose reactions are shown in Fig. 2*b*. To find the input–output relation of the mechanism and study its robustness, it is necessary to solve for the fixed points of the seven nonlinear differential equations that describe the mass-action kinetics of the model. This is done in the supporting information (SI). However, another way to obtain the input–output relation presents itself when the system is viewed as a black box that breaks down ATP and releases phosphoryl groups. Consider the fluxes of phosphoryl into and out of the system. The influx of phosphoryl groups from the cell's ATP pool is equal to the rate of the autophosphorylation reaction:

$$J_i = v_a(s)[X{\cdot}ATP]. \quad [1]$$

The outflux of phosphoryl groups is equal to the rate of the dephosphorylation reaction:

$$J_o = v_p[X{\cdot}ATP{\cdot}Y_P]. \quad [2]$$

To proceed, one can compute the concentration of the complex $X{\cdot}ATP{\cdot}Y_P$. This complex is formed in the model by the binding of $X{\cdot}ATP$ to Y_P and is lost when the constituents dissociate or when the dephosphorylation reaction takes place:

$$\frac{d}{dt}[X{\cdot}ATP{\cdot}Y_P] = k_3[X{\cdot}ATP]Y_P - (k_3' + v_p)[X{\cdot}ATP{\cdot}Y_P]. \quad [3]$$

Thus, at steady state, the concentration of the complex is proportional to the product of its component concentrations:

$$[X{\cdot}ATP{\cdot}Y_P] = \frac{k_3}{k_3' + v_p}[X{\cdot}ATP]Y_P. \quad [4]$$

Using this in Eq. **2** yields

$$J_o = v_p \frac{k_3}{k_3' + v_p}[X{\cdot}ATP]Y_P. \quad [5]$$

At steady state, $J_i = J_o$; using Eqs. **1** and **5**, one finds that:

$$v_a(s)[X{\cdot}ATP] = v_p \frac{k_3}{k_3' + v_p}[X{\cdot}ATP]Y_P. \quad [6]$$

When $[X{\cdot}ATP]$ is nonzero, one can divide it out from both sides of Eq. **6**. This results in a robust input–output relation, in which Y_P depends only on kinetic rate constants:

$$Y_P = \frac{k_3' + v_p}{k_3}\frac{v_a(s)}{v_p}. \quad [7]$$

Hence, the output Y_P does not depend on the level of any of the proteins in the system, or on the level of ATP. The output is responsive to the input signal via the rate constant $v_a(s)$. This mechanism thus shows a robust input–output relation (Fig. 2*c*).

Variations in the concentrations of the sensor or ATP do not affect the input–output relation. The only loss of robustness occurs if the total level of protein Y, denoted Y_T, falls below the expected Y_P level for a given input signal (Fig. 2*c*). In this case, there is not enough Y protein to reach the Y_P value given by Eq. **7**. If this happens, a complete analysis of the model (see SI) shows that all of the Y molecules are phosphorylated, and $Y_P = Y_T$. Hence, the system cannot respond at all to the input signal. It therefore follows that both robustness and responsiveness to the signal require that Y_T exceeds a certain threshold, given by the maximal desired output level Y_P in expected physiological conditions[¶].

Note that all three biochemical features of the mechanism are required for input–output robustness. First, ATP dependence of dephosphorylation is essential. Indeed, in a model without this feature, one finds that $Y_p \sim$ATP (ref. 5; see SI). Hence, the output is sensitive to fluctuations in the level of ATP (4). Similarly, if the sensor was not bifunctional, and dephosphorylation was carried out by a separate phosphatase protein Z, the balance of phosphoryl influx and outflux would require that $[X{\cdot}\mathrm{ATP}] \sim [Z{\cdot}Y_P] \sim ZY_P$. This would result in a steady-state level $Y_P \sim [X{\cdot}\mathrm{ATP}]/Z$ that depends on the intracellular levels of both the sensor X and phosphatase Z. Robustness would be lost.

Finally, the two-step nature of the kinase is also essential for robustness. If the sensor was a simple kinase that directly transfers a phosphoryl group from ATP to the substrate without first phosphorylating itself, the ATP breakdown rate would

[¶]When Y_T is less than the threshold, no ATP is consumed at steady state (see SI). Therefore, in the present mechanism, ATP consumption and robustness appear to be linked.

GENETICS

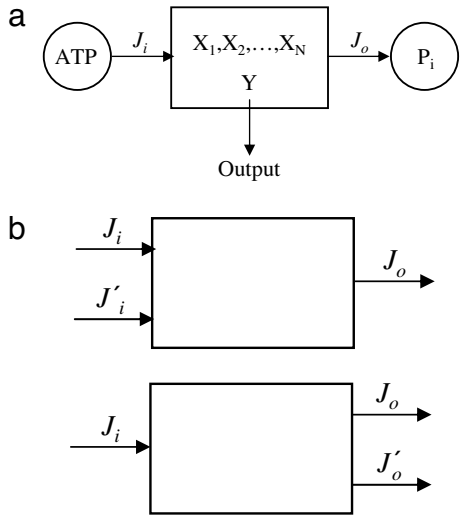

Fig. 3. Black box approach and conditions that prohibit robust input–output relations. (*a*) Considering a system as a black box that breaks down ATP at rate J_i and releases phosphoryl groups at rate J_o suggests that the concentration of component Y is robust to the concentrations of all other components X_1, X_2, . . ., X_N, if at steady state J_i and J_o depend in the same way on all components except Y but depend differently on Y. (*b*) Robustness cannot hold if there are two or more influxes that supply phosphoryl groups to the system. Similarly, robustness cannot hold if there are two or more outfluxes that drain phosphoryl groups from the system. Robustness can sometimes hold approximately, however, if the secondary fluxes J'_i and J'_o are small compared with the main fluxes.

depend on the concentration of the complex X·ATP·Y, which at steady state is proportional to $[X{\cdot}ATP]Y$. This would balance with the dephosphorylation flux, so that $[X{\cdot}ATP]Y \sim [X{\cdot}ATP]Y_P$. As a result, the output Y_P would be proportional to the level Y of free response regulator and would thus depend on the total level of response-regulator Y_T, thereby abolishing robustness. In summary, robustness over a wide range of parameters in the present mechanism seems to require the combined effects of all three biochemical features.

We also studied the effect of adding reactions to the model. For example, spontaneous dephosphorylation of Y_P is known to occur on a much slower timescale than the response time of the system (Table 1), and accordingly we find it has a negligible effect on robustness (SI). As a second example, we find that adding ADP as a cofactor for the dephosphorylation activity of the sensor [in addition to ATP and with similar efficiency (21)] has a negligible effect on robustness (SI). This is primarily because the ADP concentration is much lower than the ATP concentration in the cell (22). We also studied other reactions, including spontaneous dephosphorylation of X_P, reverse autophosphorylation, phosphotransfer, and dephosphorylation steps, as well as an alternative way to form the ternary complex in the system. In the supporting information (SI), we show that when the rates of these additional reactions are small compared with the rates of the present model reactions, they have only a small effect on robustness.

Remarks on the Black Box Approach. To analyze the properties of the mechanism presented above, the system was considered as a black box that breaks down ATP. More generally, the black box approach can be used to suggest a class of systems that have the potential to show robust input–output relations. It can also point to system characteristics that may rule out such robustness.

Consider a system with one reaction that breaks down ATP at rate J_i and another reaction that releases phosphoryl ions at rate J_o (Fig. 3*a*). Under what conditions might component Y in the system be robust? This can happen if, at steady state, J_i and J_o depend in the same way on the concentrations of all components except Y but depend in different ways on the concentration of Y itself. Thus, the steady-state influx and outflux can be expressed as follows: $J_i = f(X_1 \ldots, X_N, Y, ATP)g(Y)$ and $J_o = f(X_1 \ldots X_N, Y, ATP)h(Y)$, where $g(Y)$ and $h(Y)$ are different functions of Y that intersect at only one point. These functions also depend on kinetic rate constants, some of which are signal-sensitive. If the system reaches a stable steady state, then $J_i = J_o$, and one has $fg = fh$. Assuming the fluxes are nonzero, the function f can be eliminated from both sides of the equation, which results in $g = h$. This can be solved to yield Y as a function of rate constants only, which makes the relation between the input signal and the output Y robust with respect to all component concentrations.

Note that such robust systems can include any number of reactions within the black box, such as multiple phospho-transfer cascades, as long as a stable steady state is reached, and the influx and outflux of phosphoryl groups are as described above. Thus, many variants of the model of Fig. 2*b*, which add reactions inside the black box, can in principle be formed, and all such variants can display the robustness property.

It can also be seen that robustness of the present type cannot generally occur if there is more than one reaction that introduces phosphoryl groups into the system. If two different influxes J_i and J'_i exist (Fig. 3*b*), they generally cannot be canceled out with J_o (in the sense of Eq. **6** above), leading to a loss of robustness. Similar considerations apply to cases where there is more than one way for phosphoryl groups to exit the system.

Robustness of the present type thus depends on a single route for uptake and release of phosphoryl groups. However, in the SI, we find that in the case of the present model one can come close to robustness if the influx and outflux due to secondary reactions J'_i and J'_o are small in magnitude relative to J_i and J_o. If the relative magnitude of the secondary to primary fluxes is of order ε and steady-state stability is maintained, robustness is generally lost by only a factor of order ε.

Discussion

This study presents a mechanism that can make the input–output relation of a biochemical system robust with respect to variations in the concentrations of all of its components. The mechanism is based on biochemical reactions found in a class of bacterial signaling systems. The present approach also provides guidelines for constructing other robust mechanisms by imposing conditions on the fluxes of covalent modifier molecules, such as phosphoryl groups, into and out of the system.

The present mechanism makes experimental predictions for systems such as those of Table 1. The first is that there exists a threshold in the total response-regulator concentration Y_T such that if Y_T is less than the threshold, then no ATP is consumed at steady state, and the output Y_P is sensitive to changes in Y_T. If Y_T exceeds the threshold, then ATP is consumed at steady state, and the system has a robust input–output relation. Robustness to protein levels can be tested by using controlled expression of the proteins (5, 8, 35). The prediction that the output is insensitive to the ATP level can be tested by perturbations that alter the cell's ATP concentration (4, 22).

The biochemical implementation of the present mechanism, at least in the example treated here, relies on bifunctional enzymes to carry out phosphorylation and dephosphorylation. Moreover, these bifunctional enzymes use ATP as a phosphoryl donor for one reaction and as a coenzyme for the opposite reaction. This feature is found also in eukaryotic systems such as P-type ATPases (23). It would be of interest to extend this study also to other biological control systems that show similar features.

Not all bacterial signaling systems, however, show the hallmarks of the present mechanism. Important examples include

bacterial chemotaxis and sporulation. Indeed, it is expected that some signaling systems will not have robust input–output relations. Such systems would display cell–cell variation in their output at a given input signal. This variation, also called "individuality," has been described, for example, in bacterial chemotaxis (7, 24, 25). Similarly, signaling systems that make sharp decisions, such as the phosphotransfer cascade in the sporulation system of *Bacillus subtilis* (26), are not expected to show robust input–output relations and indeed exhibit behavior that varies between individual cells. A robust mechanism should perhaps be expected only in signaling systems in which there is a sufficiently heavy fitness penalty if the input–output relation is not precise.

In summary, the present study suggests mechanisms that respond to a signal in a way that is independent of variations in the concentrations of the system components. This mechanism for robust signaling depends on specific nonequilibrium reactions. It may thus provide an explanation for biochemical details that may otherwise appear arbitrary. Experiments can readily determine whether robust signaling occurs in additional systems, by varying protein and metabolite levels and measuring the effect on the input–output relation.

We thank N. Barkai, E. Batchelor, A. Bren, E. Dekel, G. Falkovich, M. Feinberg, E. Hornstein, W. Hsing, N. Kashtan, W. Liebermeister, B. Meerson, J. Rabinowitz, J. Rosenheim, F. Sahar, E. Schneidman T. Shimizu, T. Silhavy, and all members of our laboratory for helpful discussions and comments. This work was supported by the Kahn Family Foundation, the Israel Science Foundation, Minerva, and the Human Frontiers Science Project.

1. Elowitz MB, Levine AJ, Siggia ED, Swain PS (2002) *Science* 297:1183–1186.
2. Kaern M, Elston TC, Blake WJ, Collins JJ (2005) *Nat Rev Genet* 6:451–464.
3. Ozbudak EM, Thattai M, Kurtser I, Grossman AD, van Oudenaarden A (2002) *Nat Genet* 31:69–73.
4. Murray HD, Schneider DA, Gourse RL (2003) *Mol Cell* 12:125–134.
5. Batchelor E, Goulian M (2003) *Proc Natl Acad Sci USA* 100:691–696.
6. Berg HC (2004) *E. coli in Motion* (Springer, New York).
7. Barkai N, Leibler S (1997) *Nature* 387:913–917.
8. Alon U, Surette MG, Barkai N, Leibler S (1999) *Nature* 397:168–171.
9. Yi TM, Huang Y, Simon MI, Doyle J (2000) *Proc Natl Acad Sci USA* 97:4649–4653.
10. Levchenko A, Iglesias PA (2002) *Biophys J* 82:50–63.
11. Csete ME, Doyle JC (2002) *Science* 295:1664–1669.
12. Tyson JJ, Chen KC, Novak B (2003) *Curr Opin Cell Biol* 15:221–231.
13. Goulian M (2004) *Curr Opin Microbiol* 7:198–202.
14. Kitano H (2004) *Nat Rev Genet* 5:826–837.
15. Alon U (2006) *An Introduction to Systems Biology: Design Principles of Biological Circuits* (Chapman & Hall/CRC, Boca Raton, FL).
16. Pratt L, Silhavy TJ (1995) in *Two-Component Signal Transduction*, eds Hoch JA, Silhavy TJ (Am Soc Microbiol, Washington, DC), pp 105–127.
17. Batchelor E, Silhavy TJ, Goulian M (2004) *J Bacteriol* 186:7618–7625.
18. Igo MM, Ninfa AJ, Stock JB, Silhavy TJ (1989) *Genes Dev* 3:1725–1734.
19. Hsing W, Silhavy TJ (1997) *J Bacteriol* 179:3729–3735.
20. Hsing W, Russo FD, Bernd KK, Silhavy TJ (1998) *J Bacteriol* 180:4538–4546.
21. Zhu Y, Qin L, Yoshida T, Inouye M (2000) *Proc Natl Acad Sci USA* 97:7808–7813.
22. Jensen PR, Michelsen O (1992) *J Bacteriol* 174:7635–7641.
23. Jorgensen PL, Hakansson KO, Karlish SJ (2003) *Annu Rev Physiol* 65:817–849.
24. Spudich JL, Koshland DE, Jr (1976) *Nature* 262:467–471.
25. Levin MD, Morton-Firth CJ, Abouhamad WN, Bourret RB, Bray D (1998) *Biophys J* 74:175–181.
26. Stragier P, Losick R (1996) *Annu Rev Genet* 30:297–241.
27. Carmany DO, Hollingsworth K, McCleary WR (2003) *J Bacteriol* 185:1112–1115.
28. Raivio TL, Silhavy TJ (1997) *J Bacteriol* 179:7724–7733.
29. Batchelor E, Walthers D, Kenney LJ, Goulian M (2005) *J Bacteriol* 187:5723–5731.
30. Montagne M, Martel A, Le Moual H (2001) *J Bacteriol* 183:1787–1791.
31. Nakano MM, Zhu Y (2001) *J Bacteriol* 183:1938–1944.
32. Oh JI, Ko IJ, Kaplan S (2004) *Biochemistry* 43:7915–7923.
33. Savageau MA (1971) *Nature* 229:542–544.
34. Savageau MA (1976) *Biochemical Systems Analysis: A Study of Function and Design in Molecular Biology* (Addison–Wesley, Reading, MA).
35. Kacser H, Burns JA (1973) *Symp Soc Exp Biol* 27:65-104.
36. Wagner A (2005) *Robustness and Evolvability in Living Systems* (Princeton Univ Press, Princeton, NJ).